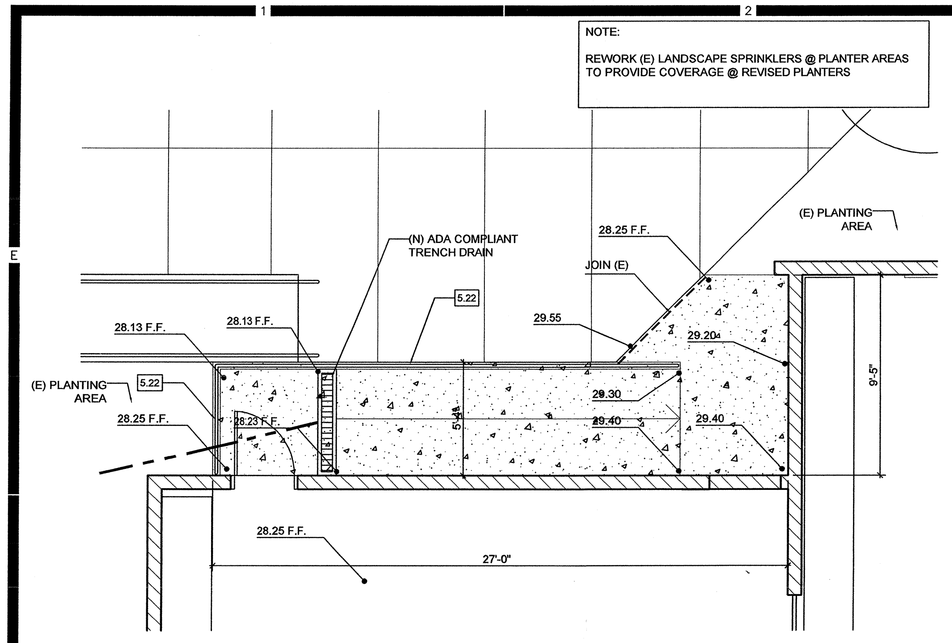

RAMP PLAN - CLASSROOM B8 | D2 | 1/4" = 1'-0"

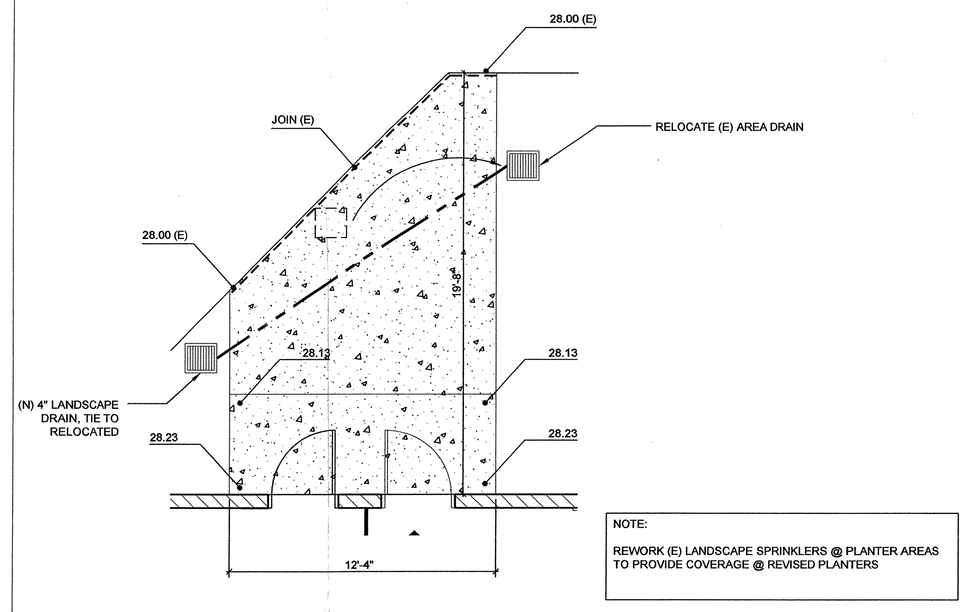

RAMP PLAN - CLASSROOM B7 | D4 | 1/4" = 1'-0"

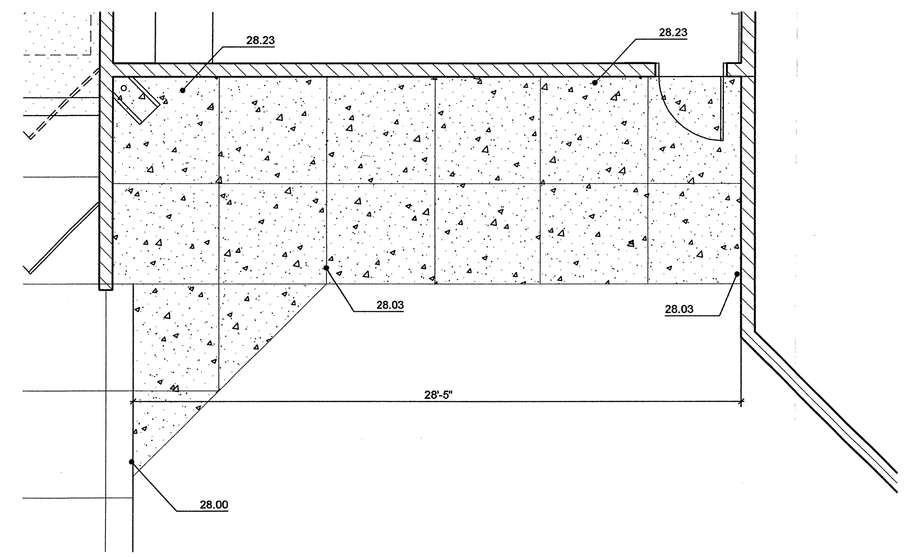

RAMP PLAN - CLASSROOM B3 | D6 | 1/4" = 1'-0"

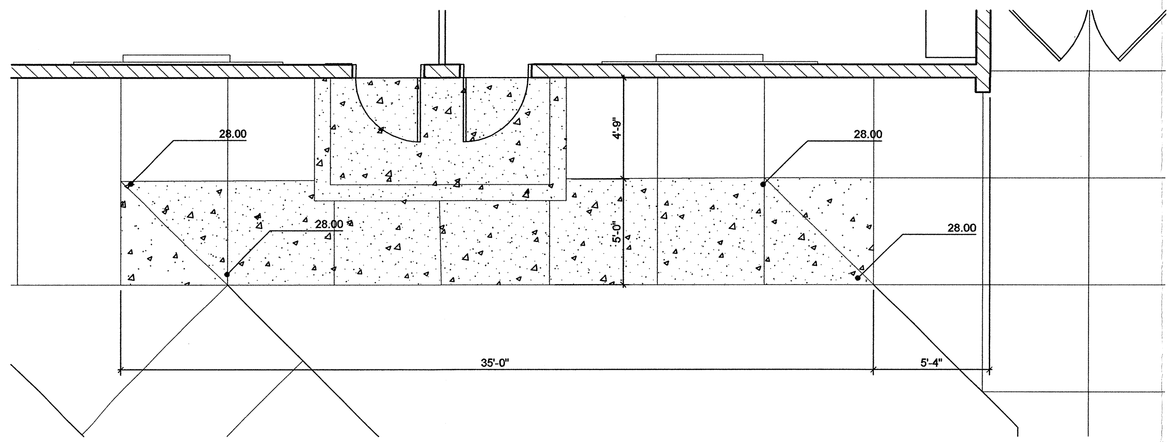

WALK PLAN - CLASSROOM B1 | B3 | 1/4" = 1'-0"

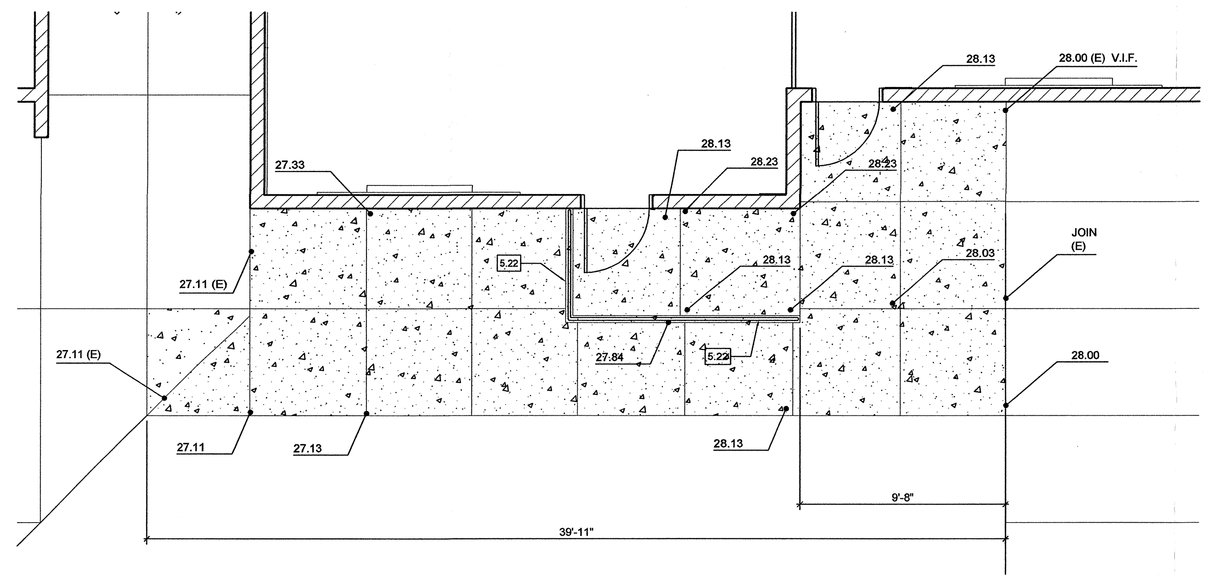

RAMP PLAN - CLASSROOM C5 | B6 | 1/4" = 1'-0"

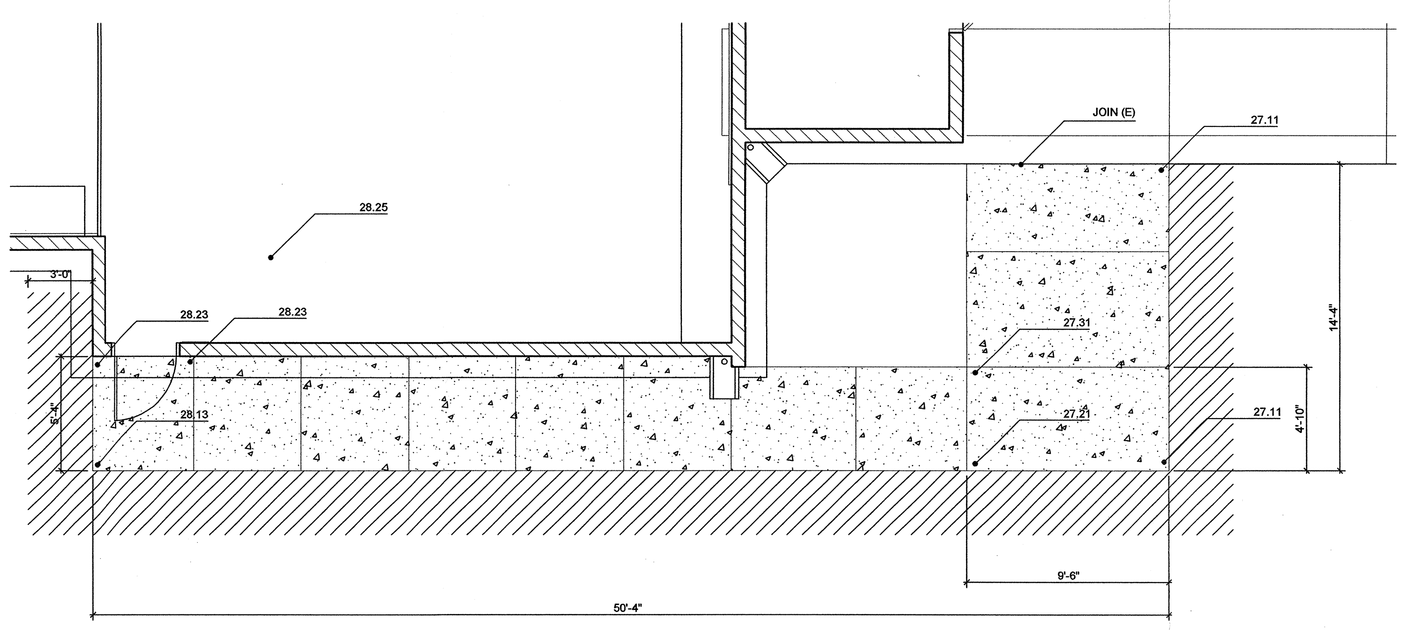

INTERIOR RAMP AT KINDER - REMODEL PLAN | A4 | 1/4" = 1'-0"

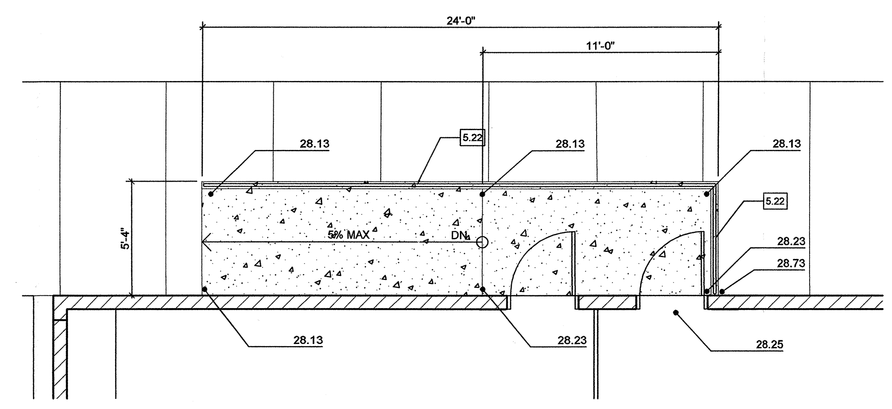

RAMP PLAN - CLASSROOM C1 | A6 | 1/4" = 1'-0"

HMC ARCHITECTS
Architecture Interiors Planning
3546 CONCOURS STREET
ONTARIO, CALIFORNIA 91764
Telephone: 909 . 989 . 9979
Fax: 909 . 483 . 1400
www. hmcarchitects .com

KEYNOTES

DEMOLITION KEYNOTES

1.38 DEMOLITION KEYNOTE SYMBOL

1.02 REMOVE CONCRETE RAMP AND LANDING
1.03 REMOVE STAIRS AND LANDING
1.04 EXTENT OF SAWCUT
1.08 REMOVE GUARDHANDRAIL
1.13 REMOVE WALL COMPLETELY
1.58 REMOVE AND RELOCATE (E) STORAGE CONTAINER

CONSTRUCTION KEYNOTES

A. CONTRACTOR TO INCLUDE ALL WORK AND MATERIALS NECESSARY TO FULLY COMPLETE ALL ITEMS REQUIRED.

5.22 CONSTRUCTION KEYNOTE SYMBOL

2.01 (E) STORAGE CONTAINER RELOCATED
3.02 EXTERIOR CONCRETE RAMP AND LANDING
3.03 CONCRETE STAIRS PER DETAILS D2, E2, E3/A9.3
5.22 GUARDRAIL/HANDRAIL PER DETAIL E1/A9.1
5.23 ALUMINUM STAIR NOSING PER DETAIL E2/A9.3
5.24 (E) GATE WITH PANIC HARDWARE
5.26 ½" SQUARE PICKETS EQUALL SPACED, 4" MAX.
6.02 (E) UPPER CASEWORK TO REMAIN, REFER TO INTERIOR ELEVATIONS

CONSTRUCTION LEGEND

(N) P.C. PAVING PER PLAN

(N) A.C. PAVING PER PLAN - TRANSISION (E) AC PAVING TO @ JOIN LINE TO NEW CONCRETE TYP.

EXISTING WALLS TO REMAIN

EXISTING 1 HR. RATED WALL-2X4 WOOD STUDS AT 16" O.C. WALL FINISH TO BE EXTENDED TO THE UNDERSIDE OF THE ROOF SHEATHING

EXISTING AREA SEPARATION WALLS 2 HR. RATED WALL ¾" NEAT WOOD FIBERED PLASTER AND MEATL LATH ON 2X4 WOOD STUDS AT 16" O.C., FINISH FLOOR TO BOTTOM OF ROOF SHEATHING

EXISTING CMU WALLS

NEW NON-RATED INTERIOR WOOD STUD WALL PER DETAILS A6, D6/A9.2. DOOR INFILL PER DETAIL A5/A9.2. NEW CURB AT RESTROOM WALLS PER DETAILS A4, E5/A9.2

NEW RATED INTERIOR WOOD STUD WALL PER DETAILS A6, D6/A9.2. DOOR INFILL PER DETAIL A5/A9.2. NEW CURB AT RESTROOM WALLS PER DETAILS A4, E5/A9.2

EXISTING CONSTRUCTION TO BE REMOVED

CONSULTANT SEAL | CONSULTANT

KEY PLAN

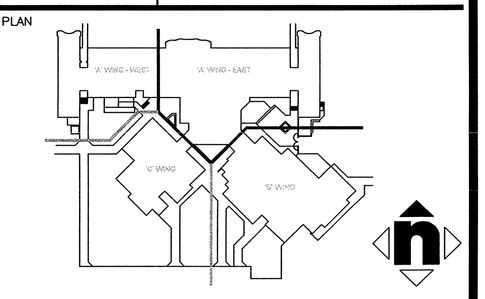

AGENCY APPROVAL

IDENTIFICATION STAMP
DIV. OF THE STATE ARCHITECT
04 - 106133
AC____ FLS____ SS____
DATE_____

PROJECT TITLE

SAN BERNARDINO CITY UNIFIED SCHOOL DISTRICT
777 NORTH "F" STREET
SAN BERNARDINO,CA 92410

RAMONA-ALESSANDRO ELEMENTARY SCHOOL
MODERNIZATION
670 RAMONA AVENUE
SAN BERNARDINO, CA 92411

© HMC GROUP 2003

NO.	REVISIONS	DATE	NO.	REVISIONS	DATE
1	DSA ADDENDUM NO. 1	2/10/10			
4	ADDENDUM NO. 4	3/11/10			

DRAWING TITLE

RAMP, STAIR PLANS AND ELEVATIONS

ARCHITECT SEAL

LICENSED ARCHITECT
CHRISTOPHER RICHARD WAYNE
CN NO. C-19759
REN. 02-24-11
STATE OF CALIFORNIA

DESIGNED MRoth	PROJECT NO. 3137117
DRAWN MMinamide	SCALE AS NOTED
CHECKED QC	DRAWING NO. A4.6
DATE 19 MAR 2004	

PLEASE RECYCLE

" BID ISSUANCE SET"